OPTIMUS® TRANSPORT PACKAGINGS

HIGHLIGHTS

- Versatile, cost-effective Type B(U)F Packaging for Intermediate Level Waste (ILW), Transuranic (TRU) Waste, Low-Enriched Uranium (LEU), High-Assay LEU (HALEU), and spent fuel
- Two package types (OPTIMUS-L & -H) for low-activity and high-activity contents
- Ships challenging waste, such as high-activity sealed sources, over-packed containers with high heat loads, and aerosol cans with compressed or liquified gas propellant
- Use of same Cask Containment Vessel (CCV) design and Shield Insert Assemblies in both OPTIMUS-L & -H packages allow interchangeability and standardization of operating procedures
- Easily reconfigured with shield inserts for increased activity contents
- Small, light packages ideal for restricted access and/or low crane capacity
- Pallets allow forklift handling to simplify loading and unloading operations
- Multiple lift and tie-down options available for maximum flexibility





OPTIMUS shipping casks are designed to support legal weight truck (LWT) shipments of a wide range of wastes and fissile material contents in multiple transport configurations.

- Up to 5 OPTIMUS-L packagings per legal-weight truck shipment
- 1 OPTIMUS-H packaging per legal-weight truck shipment

The Shielded Device Insert Assembly (SDIA) enables the secure and compliant transport of high activity Cesium and Cobalt self-shielded irradiators in the light and configurable OPTIMUS-L packaging.

SIA	OPTIMUS-H	OPTIMUS-L
1 inch	✓	✓
2.25 inches	✓	✓
3.75 inches	✓	—

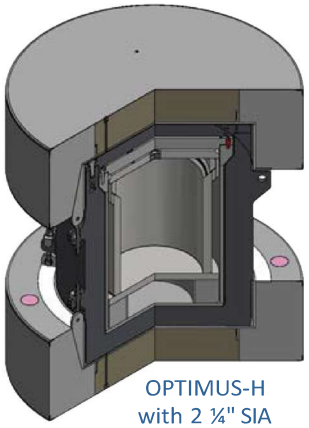

OPTIMUS-H with 2 ¼" SIA

NAC International is transforming radioactive materials (RAM) transportation packaging with its patented OPTIMUS systems; a new family of Type B(U)F transportation packagings developed for transportation of challenging materials. OPTIMUS-L is used for low-activity contents such as CH-TRU, low-activity ILW, LEU, and HALEU; OPTIMUS-H is used for high-activity contents including RH-TRU, high-activity ILW, and spent fuel.

OPTIMUS provides a transportation solution for challenging contents, such as overpacked containers (e.g., 110-gallon drums) with high heat loads or fissile gram equivalent (FGE) content, gas generating materials, and TRU waste including aerosol cans filled with compressed or liquified gas propellant.

OPTIMUS transportation packagings are designed to satisfy the regulatory requirements of both IAEA SSR-6 and 10CFR71.

Large cavity and high payload weight limit allows OPTIMUS packaging to be reconfigured with Shield Insert Assemblies (SIAs), balancing weight and shielding constraints.



1" SIA



2 ¼" SIA with Lid



3 ¾" SIA with Lid

PACKAGING COMPONENT DESCRIPTION

CASK CONTAINMENT VESSEL (CCV)

- Stainless steel containment vessel
- Innovative bolted closure system to facilitate remote closure operations
- Universal and compatible lifting and anchoring attachments
- The CCV is designed to be interchangeable for use in both the OPTIMUS-L and OPTIMUS-H

OUTER SHIELD VESSEL (OSV)

- Cost-effective shield vessel to protect CCV
- Simplified mechanical closure with weather seal
- Integral trunnions, tie downs and attachment lugs for efficient handling
- Integrated drain and monitoring port

IMPACT LIMITER SYSTEM (ILS)

- Closed-cell polyurethane foam encased in stainless steel
- Swing-bolt connections for quick installation/removal

SAFETY BY DESIGN FEATURES

- 10CFR71 & SSR-6 Type B(U)F compliant
- Designed to ASME Code Section III-NB and NF criteria
- Pressurization analysis
- Contingency combustion analysis, considering possible deflagration and detonation
- Up to 395 FGE per drum for plutonium and uranium wastes

CONTACT:
Mike Valenzano, Vice President,
Transportation Projects
Phone: +1 678-328-1213
Contact

PACKAGING ATTRIBUTE	OPTIMUS-H	OPTIMUS-L
Package ID Number	USA/9392/B(U)F-96	USA/9390/B(U)F-96
Controls	Exclusive Use	
Cavity Size (in.)	Ø32.5 x 47.0 (fits 110 Gallon Drum)	
MNOP (psig)	100	
Outer Dimensions (in.)	Ø74.2 x 83.2	Ø49.0 x 70.0
Empty Weight (lb.)	24,700	6,050
Maximum Content Weight (lb.)	7,300	3,150
Gross Weight (lb.)	~25,000 to 32,000	~6,500 to 9,200



		Co-60 Limits[1] (Ci)	Cs-137 Limits[1] (Ci)	Cavity Height (in.)	Cavity Diameter (in.)	Payload Capacity (lbs)
OPTIMUS-L	Bare	0.08	0.40	47	32.5	3,500
	1-inch SIA	0.16	1.07	35.25	24	2,000
	2.25-inch SIA	0.43	4.22	35.25	24	500
	SDIA[2]	5.00	2,800	40.125	14.5[3]	2,200
OPTIMUS-H	Bare	15.6	636	47	32.5	7,300
	1-inch SIA	35.8	2,079	35.25	24	5,800
	2.25-inch SIA	119	10,754	35.25	24	4,300
	3.75-inch SIA	513	81,162	41	24	2,400

1 Calculated according to method and tables found in Appendix 7.5 in each respective Safety Analysis Report (SAR)
2 Shielded Device Insert Assembly (SDIA); shielded devices credited for shielding
3 SDIA includes cutout for Beam Port

NAC INTERNATIONAL
Kanadevia Group